Daloc D43 Security Door RC3

Security door Daloc D43 combines wood and steel in a sophisticated way: The feeling of wood with all the advantages of a steel door. The wood panel is manufactured to the customer's specifications. An exclusive alternative in environments where architects, property developers and housing associations are striving to achieve a high-class image. D43 is primarily intended as an entry door for apartments in heated indoor environments, such as staircases.

Reference	Clear opening dimensions	Outer dimensions frame	Weight
Single door			
D43 9 x 21	800 x 2025	890 x 2093	115
D43 10 x 21	900 x 2025	990 x 2093	125
D43 11 x 21	1000 x 2025	1090 x 2093	130

Other module sizes and special sizes are available on request.

* At 90 degree opening door loss 55 mm (flat surface), 60 mm (panelled)

CLASSIFICATIONS

The door type is tested by RISE Research Institutes of Sweden AB and certified by RISE Certifiering and SBSC Svensk Brand- och Säkerhetscertifiering AB. It is manufactured under the control of RISE and SBSC.

Fire rating: EI30.

Sound reduction: Rw 38 dB, option 43*, 50** och 53*** dB.

* Without letter box
** Wood panel on front face and without letter box
*** Door manufactured as tandem door.

Burglar resistance class: EN 1627 RC3.
The door is approved for installation both inwards and outwards opening.

Fire gas seal: Option EN 13501-2 klass S_a och S_{200}.

We reserve the right to make modifications to the designs.

DOOR LEAF

Design: The wood panel, which is based on MDF, is manufactured to the customer's specification. It can be manufactured as a panelled door with 2-5 panels in various versions or with flat sheets. The core of the steel door is based on Daloc security door S43, which has a thick rolled seam edge, and consists of steel panels folded with fulllength concealed edge profiles.
Material: MDF. 1 mm steel panels and mineral wool insulation.
Surface treatment: 43 is faced with surfacemounted wood panels on either the inward and/or outward side, on top of the steel panels of the door core. The surface of the wood panel is either veneered, pattern veneered or painted. The painted version can also be grooved. D43, with a wood panel on the outside, can be combined with Linea design on the inside of the door leaf. Please contact Daloc for suggestions of different wood types, veneer designs, colours etc.

FRAME

Design: The door is supplied as standard with white painted frame type 41, which forms an architrave on the opening face. The frame is supplied assembled, with no loose parts. The seal is placed in a groove in the frame. Several different types of frame are available: with architrave on the opening face (type 41), architrave on both sides (type 44-49) or without architrave (type 42). he frame can be supplied with solid wood architraves in matching wood on the opening face. The wood architraves have mitred corners and are supplied separately with a degree of oversize to facilitate adaptation and installation on site.
Insulation: Supplied insulated with mineral wool from the factory
Installation: Quick installation and fixing through the frame's adjustable frame screws (Hexagonal key).

THRESHOLD

The frame is fitted as standard with hardwood thresholds. D43 can be ordered with a galvanized threshold bar or a threshold plate combined with drop strip (sound reduction 38dB dB) or threshold plate, brush strip or drop seal threshold (not tested for sound reduction).

STANDARD FITTINGS

Fix multi point lock excl. cylinder. Note! Resistance class 3 requires a Scandinavian round class 3 cylinder or an oval cylinder with approved cylinder fittings, A and B dimensions vary depending on choice of wood panel. Please contact Daloc. Galvanized adjustable fixed pin hinges. Security bolt in striking plate and double dog bolts in rear edge. Additional integrated drill protection in main lock.

OPTIONAL COMPONENTS

Can be supplied with the most common iron- mongery for apartments, such as door viewer, mechanical doorbell, key cylinder etc. Please contact Daloc for suggestions of different ironmongery.

We reserve the right to make modifications to the designs.

We reserve the right to make modifications to the designs.

DETAIL SKETCHES

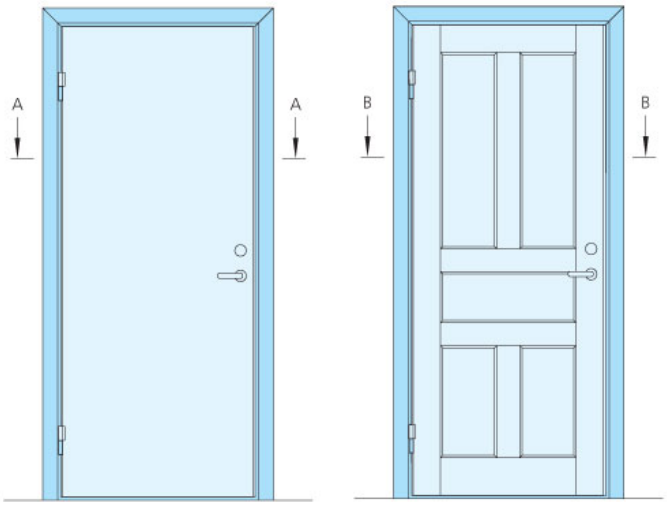

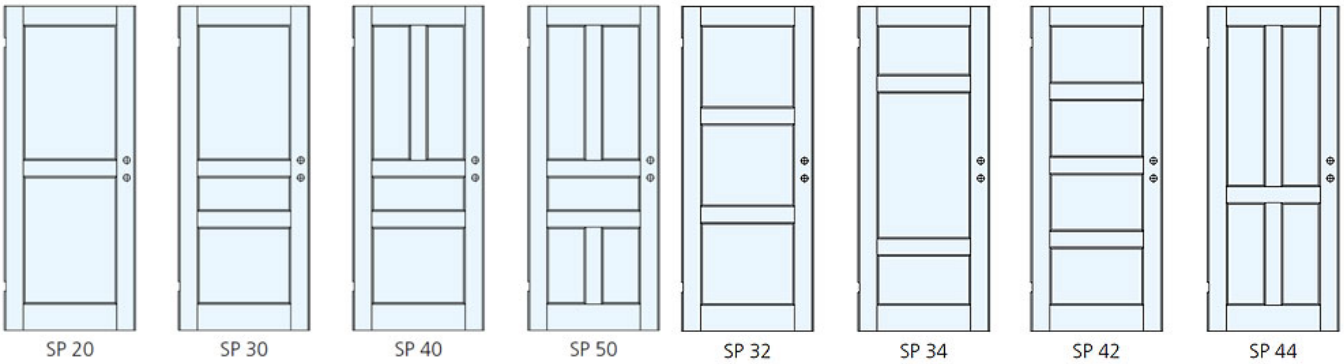

We reserve the right to make modifications to the designs.

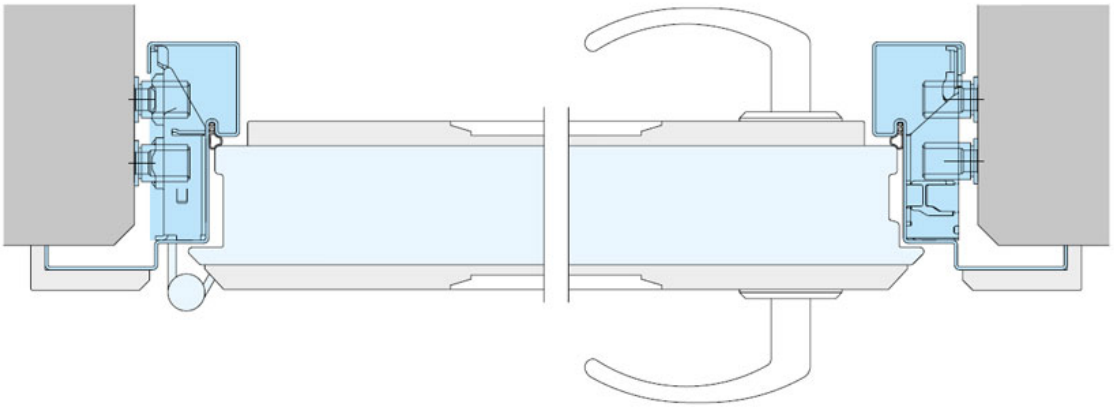

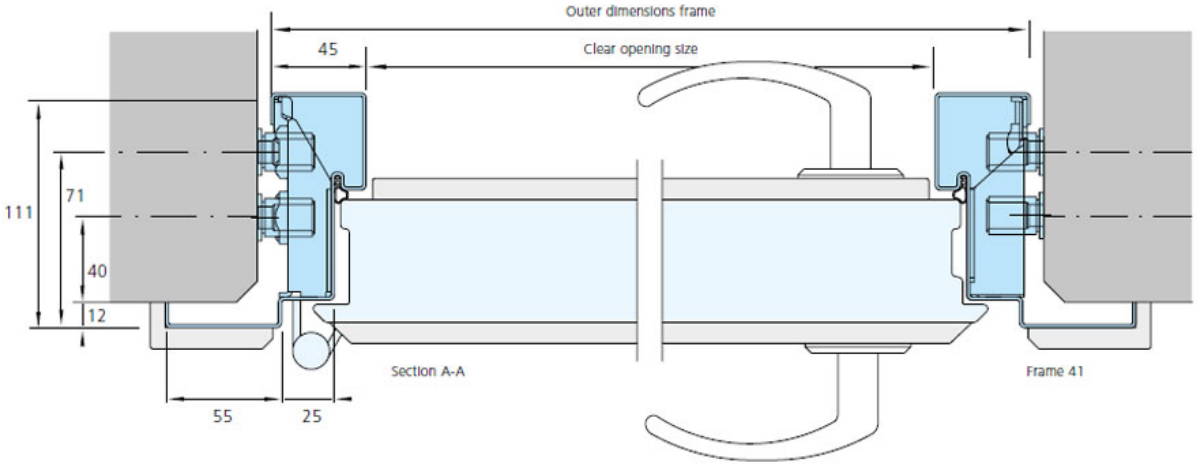

We reserve the right to make modifications to the designs.

PICTURES

The bevel of the wood panel aligns with the door’s steel rolled edge, which gives a neat transition to the wood architraves on the frame.

Security door D 43 has a multi point lock, the main lock is supplemented by hooks above and below.

At the main lock, the door leaf has integrated drilling protection.

We reserve the right to make modifications to the designs.